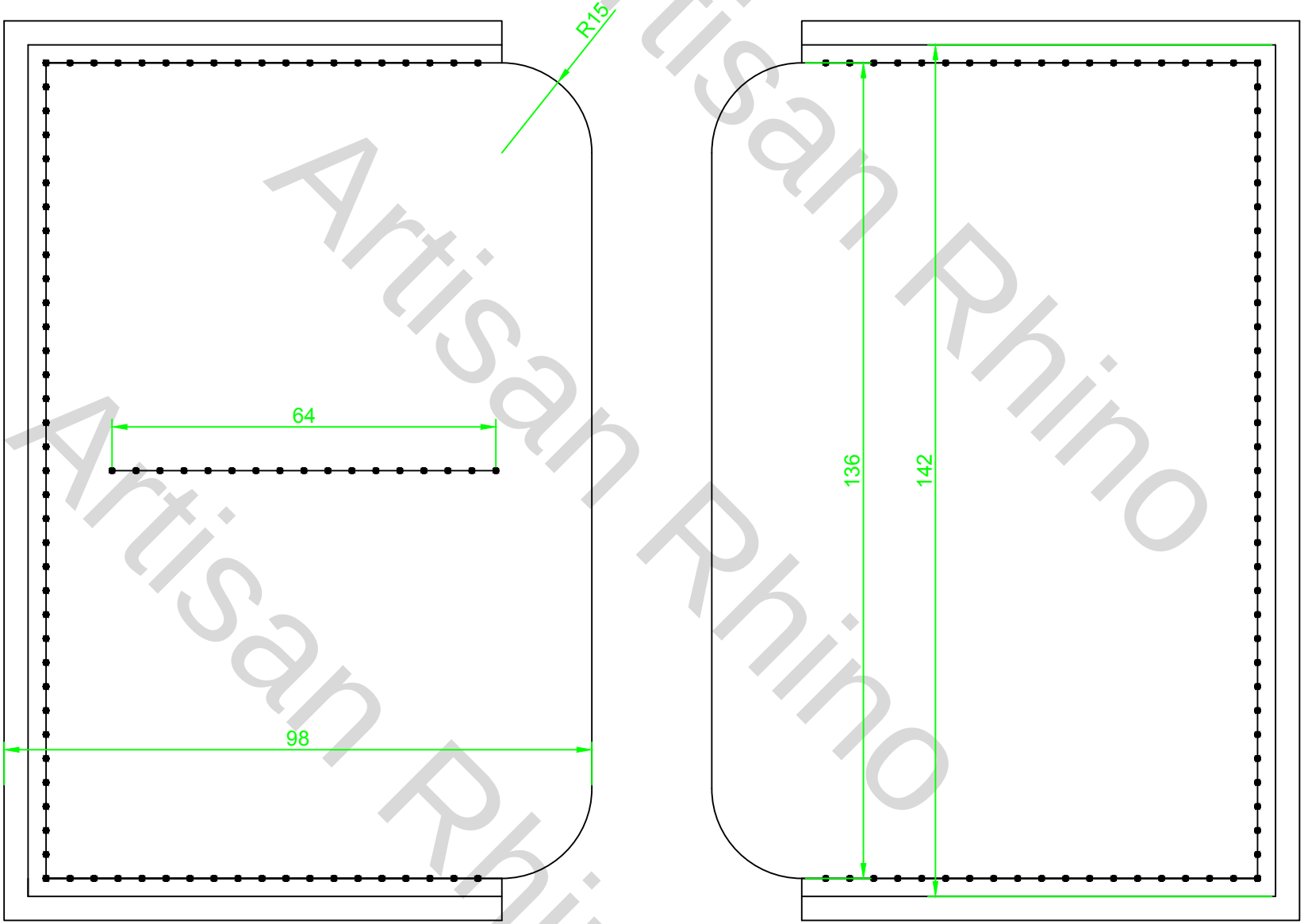

Artisan Rhino
Artisan Rhino
Artisan Rhino