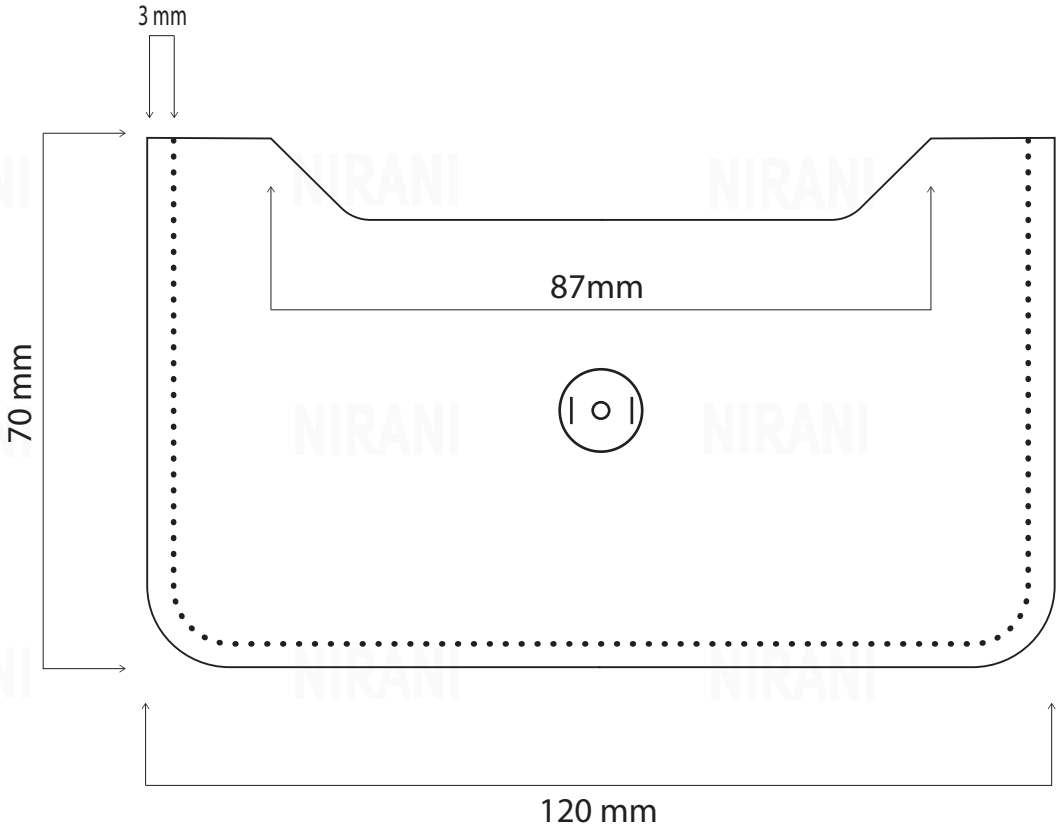

x1

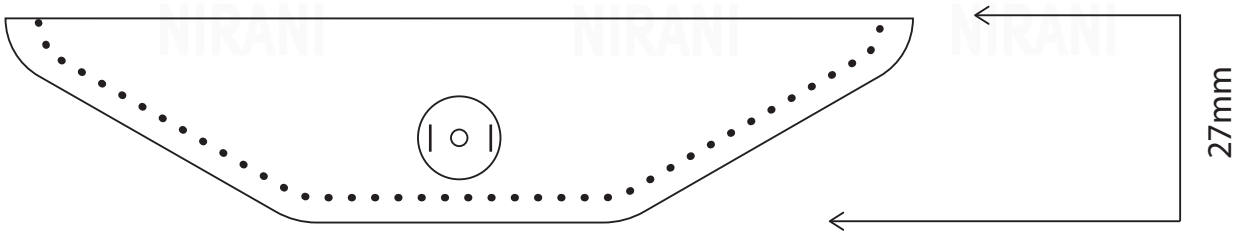

x1

Print in actual size on A4 paper

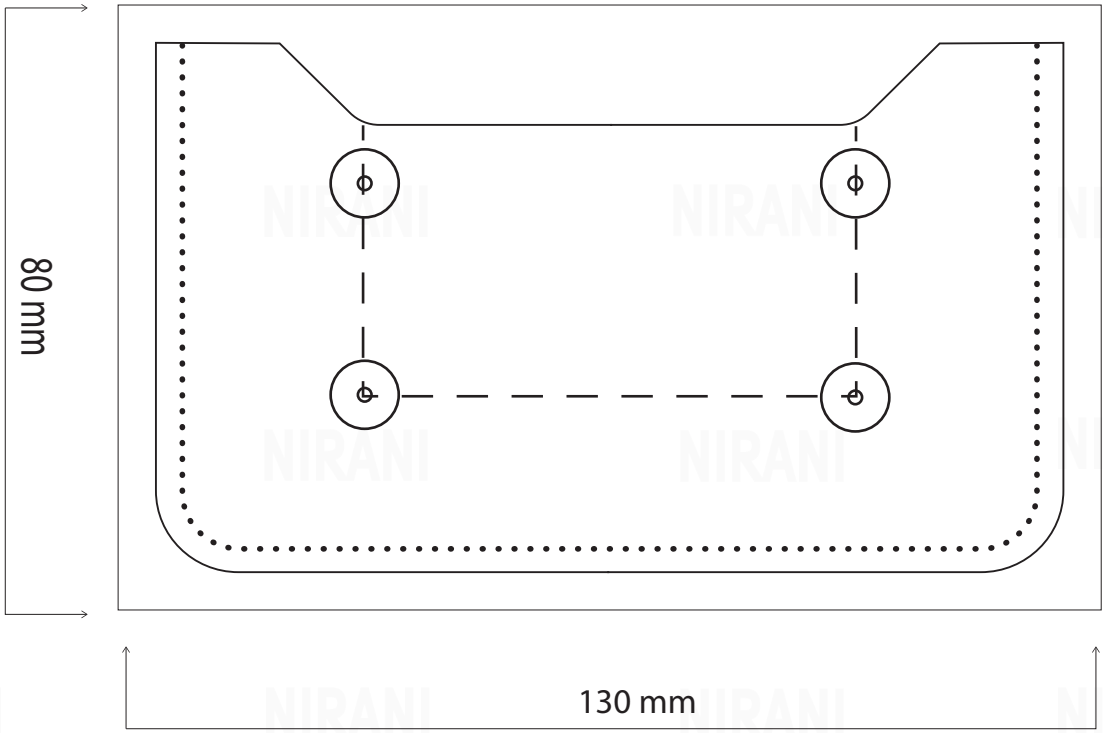

x5 = 1 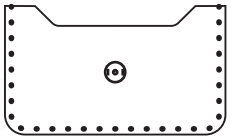 + 4 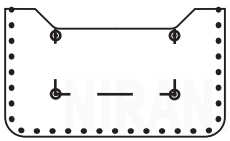

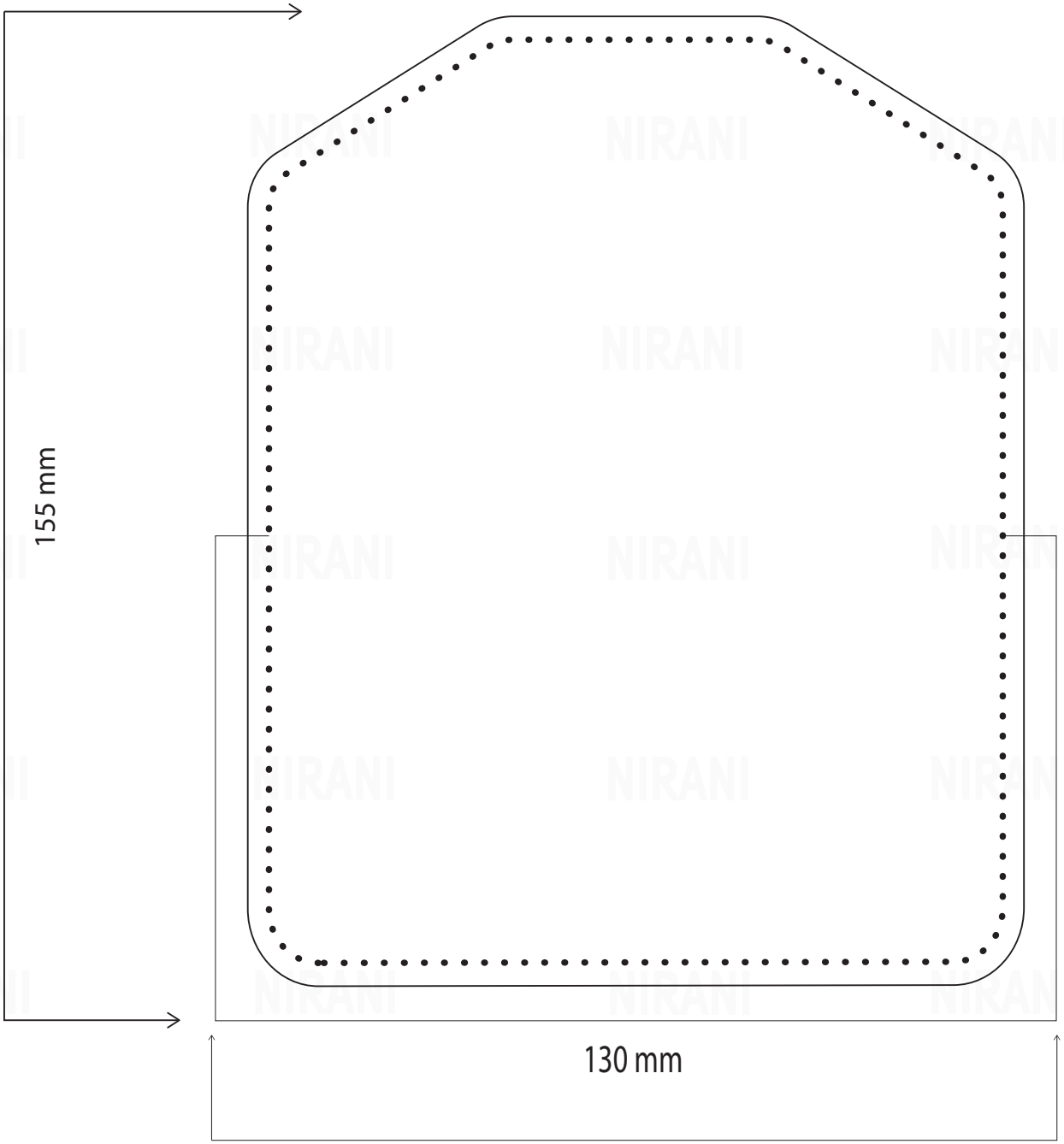
155 mm
130 mm