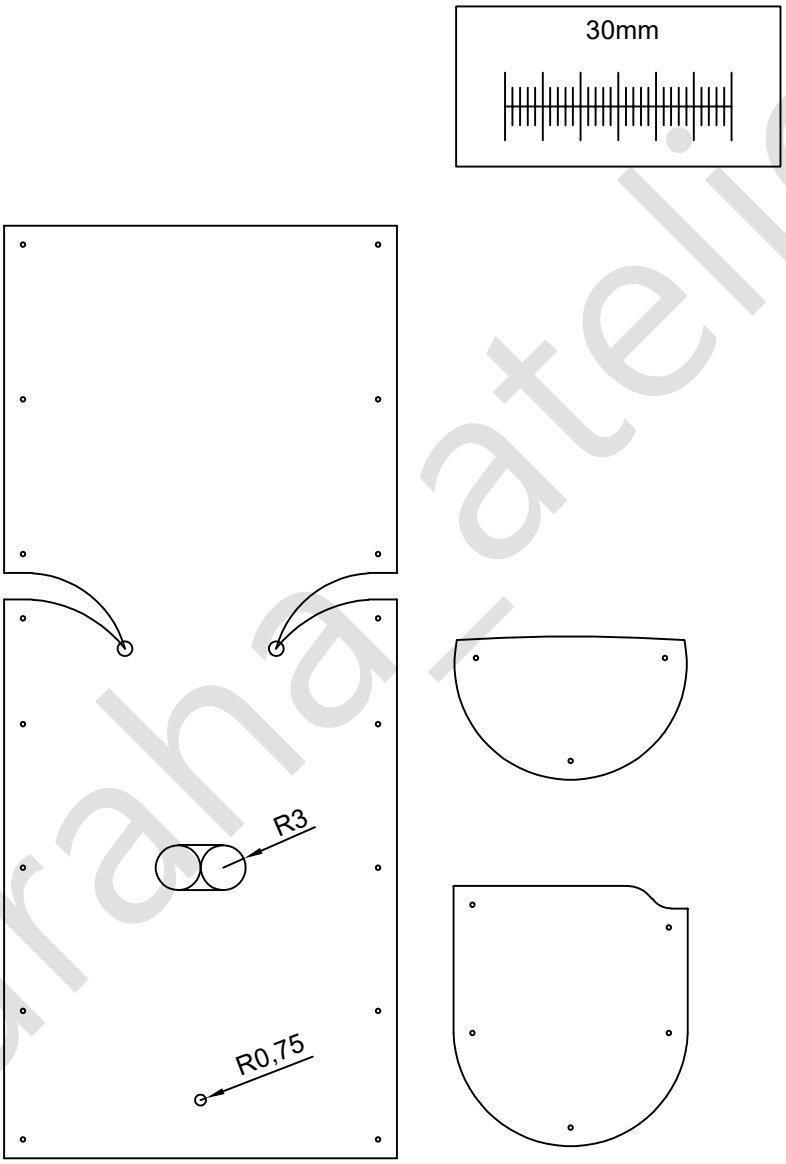

furaha_atelier