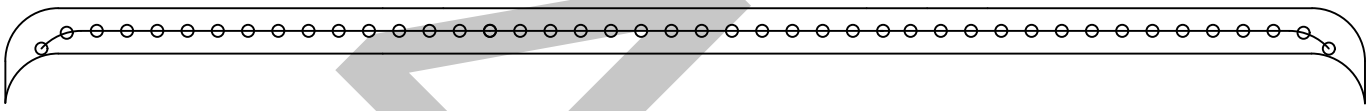

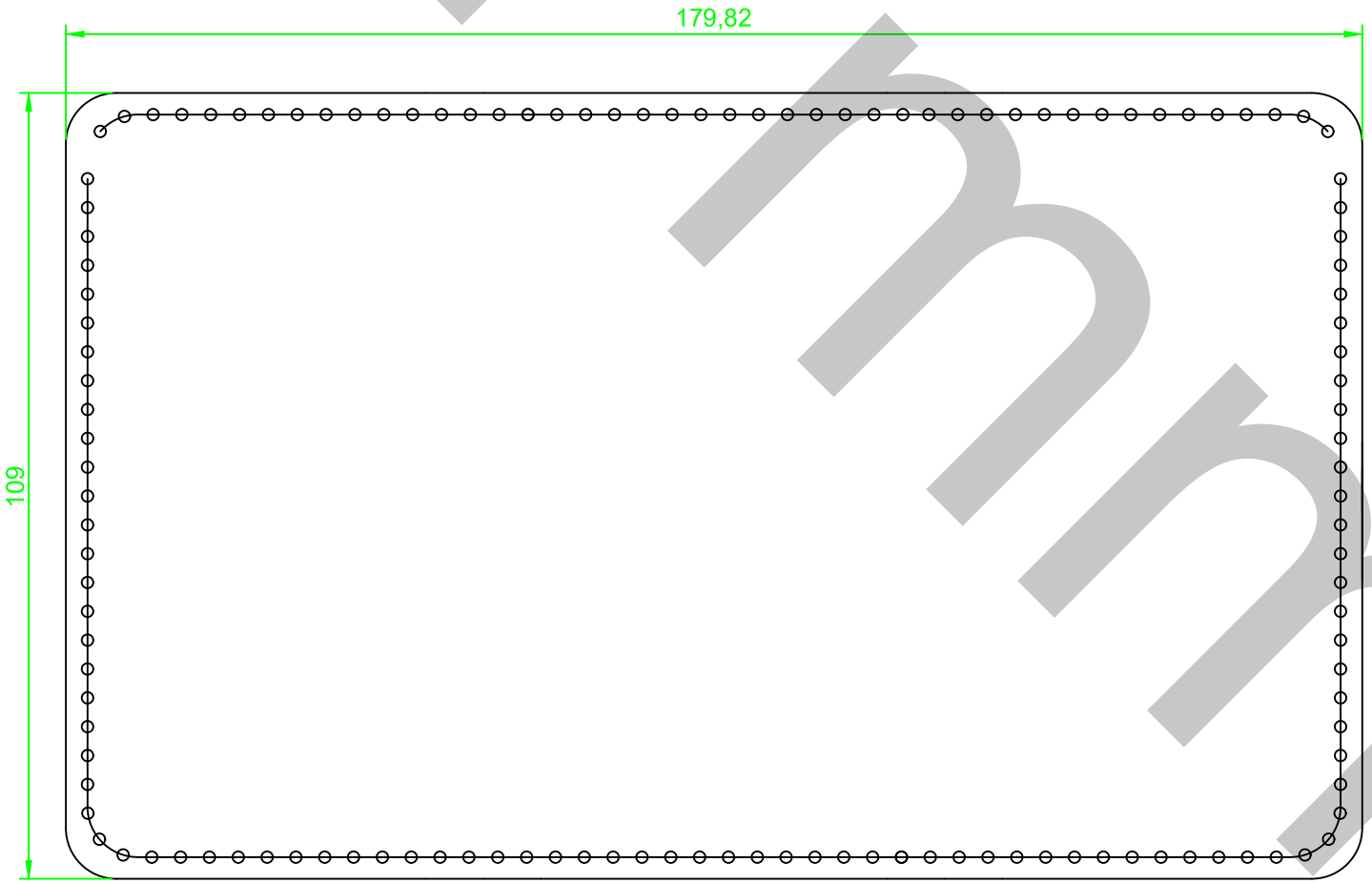

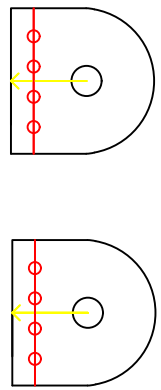

4mm

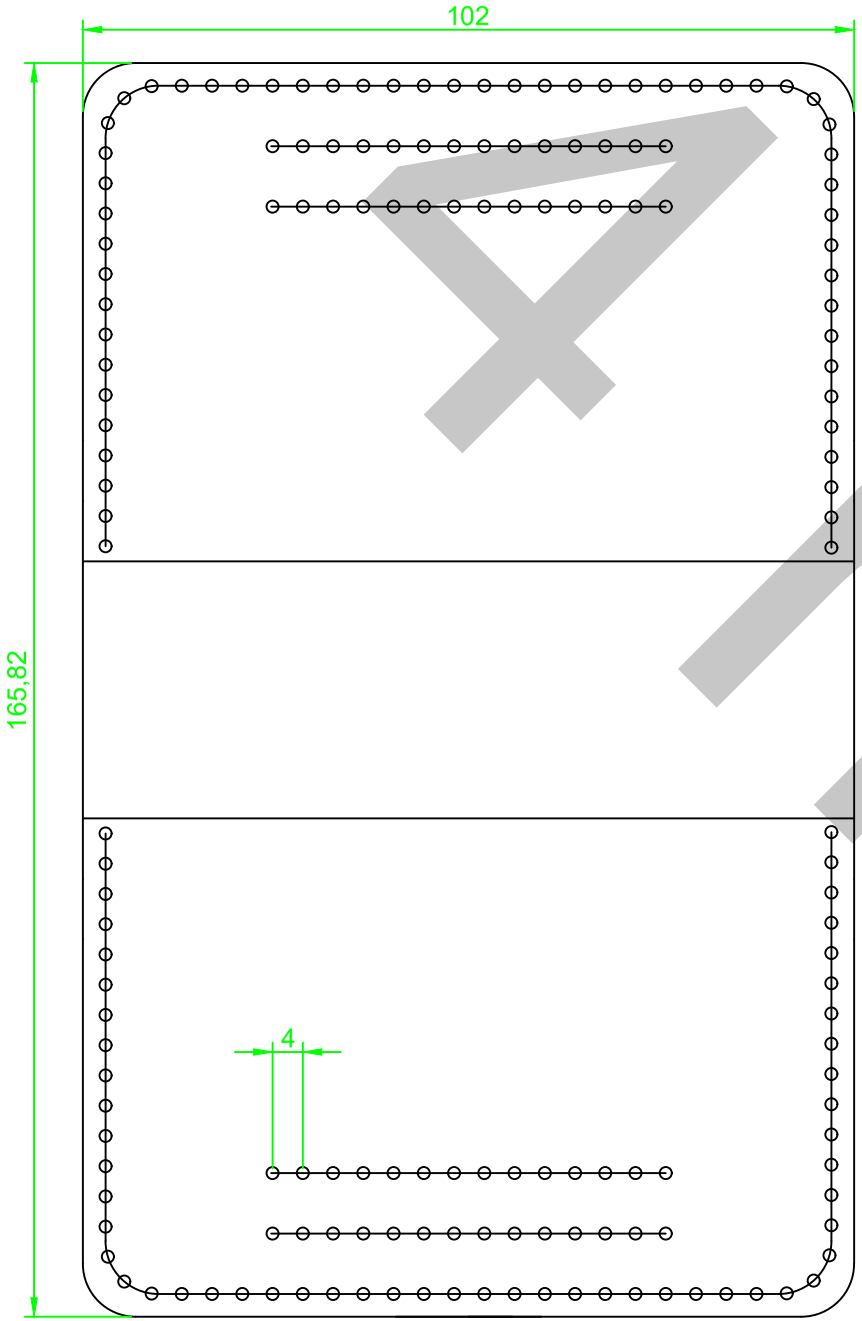

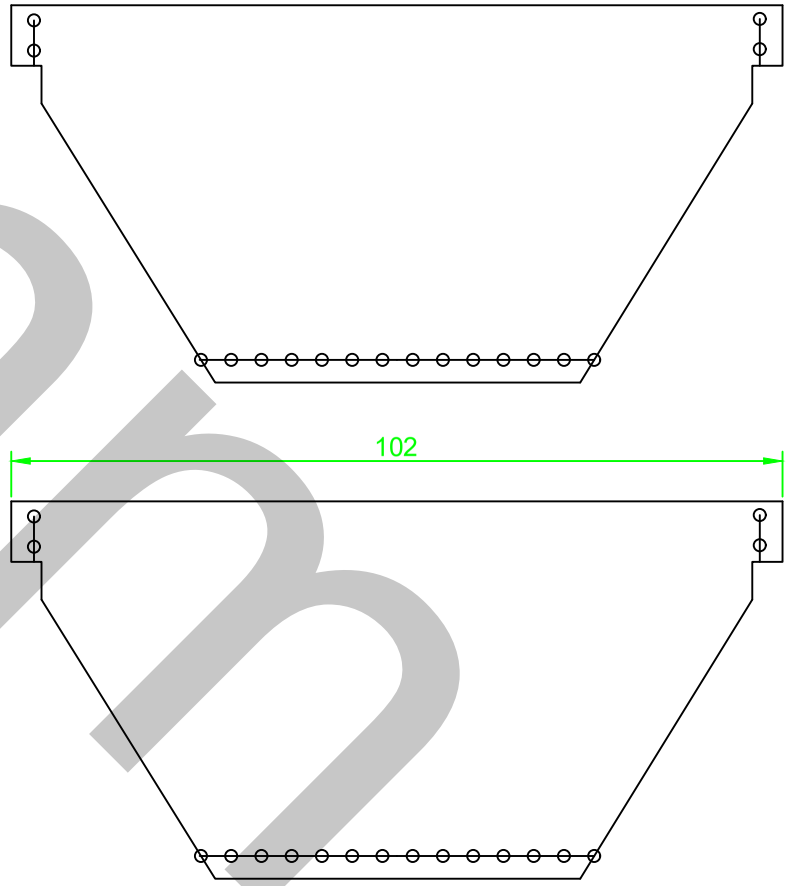

SINCE 2019
Contribution
LEATHERCRAFT
DESIGNED & HANDCRAFTED
4mm

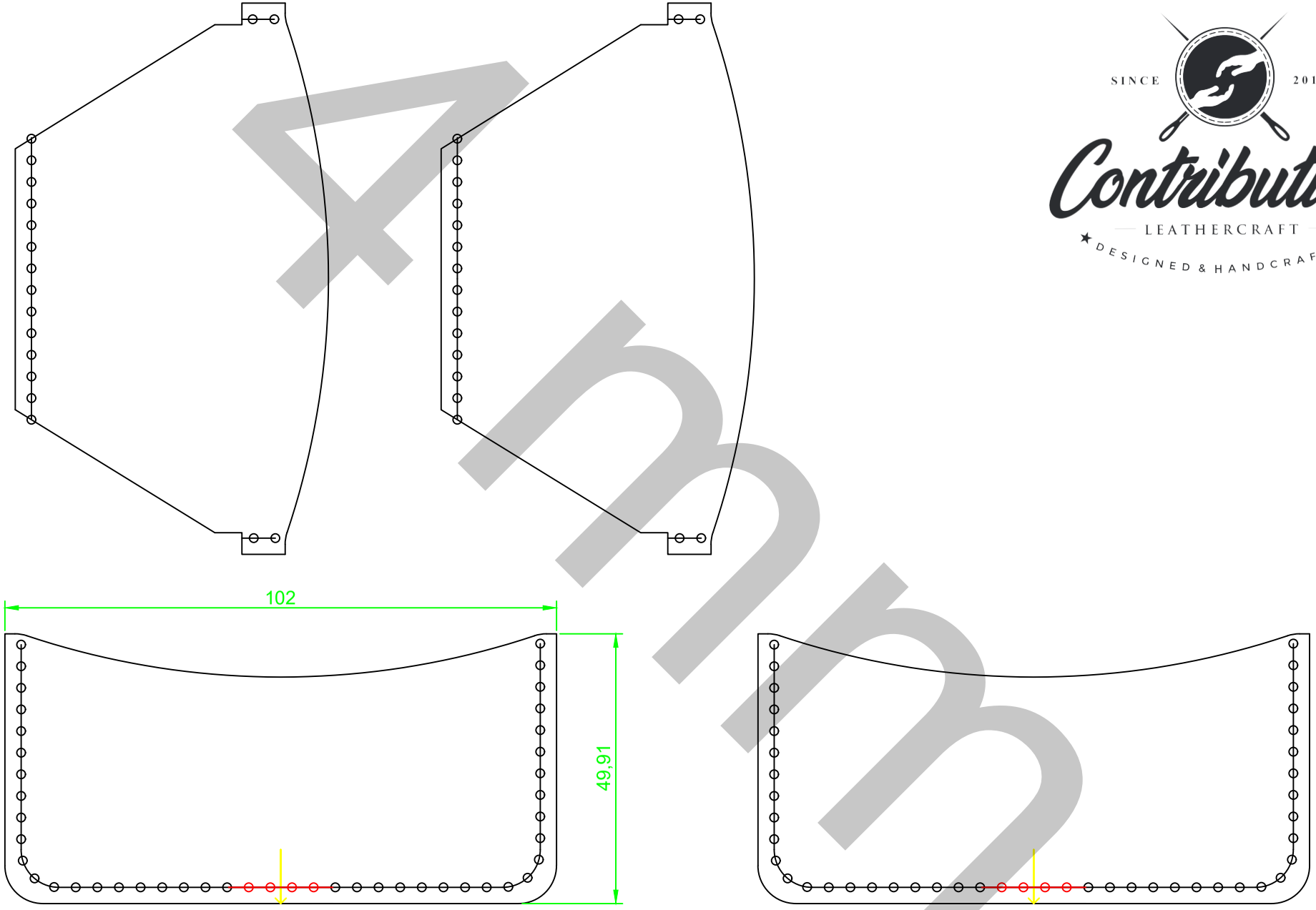

4mm

SINCE 2019
Contribution
LEATHERCRAFT
DESIGNED & HANDCRAFTED