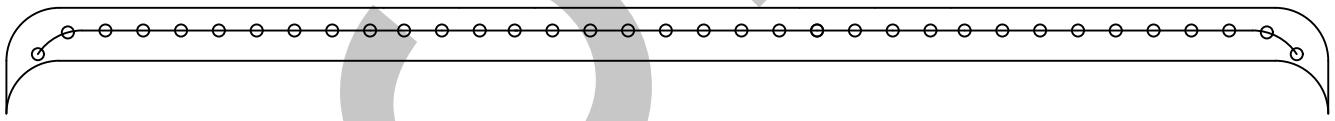

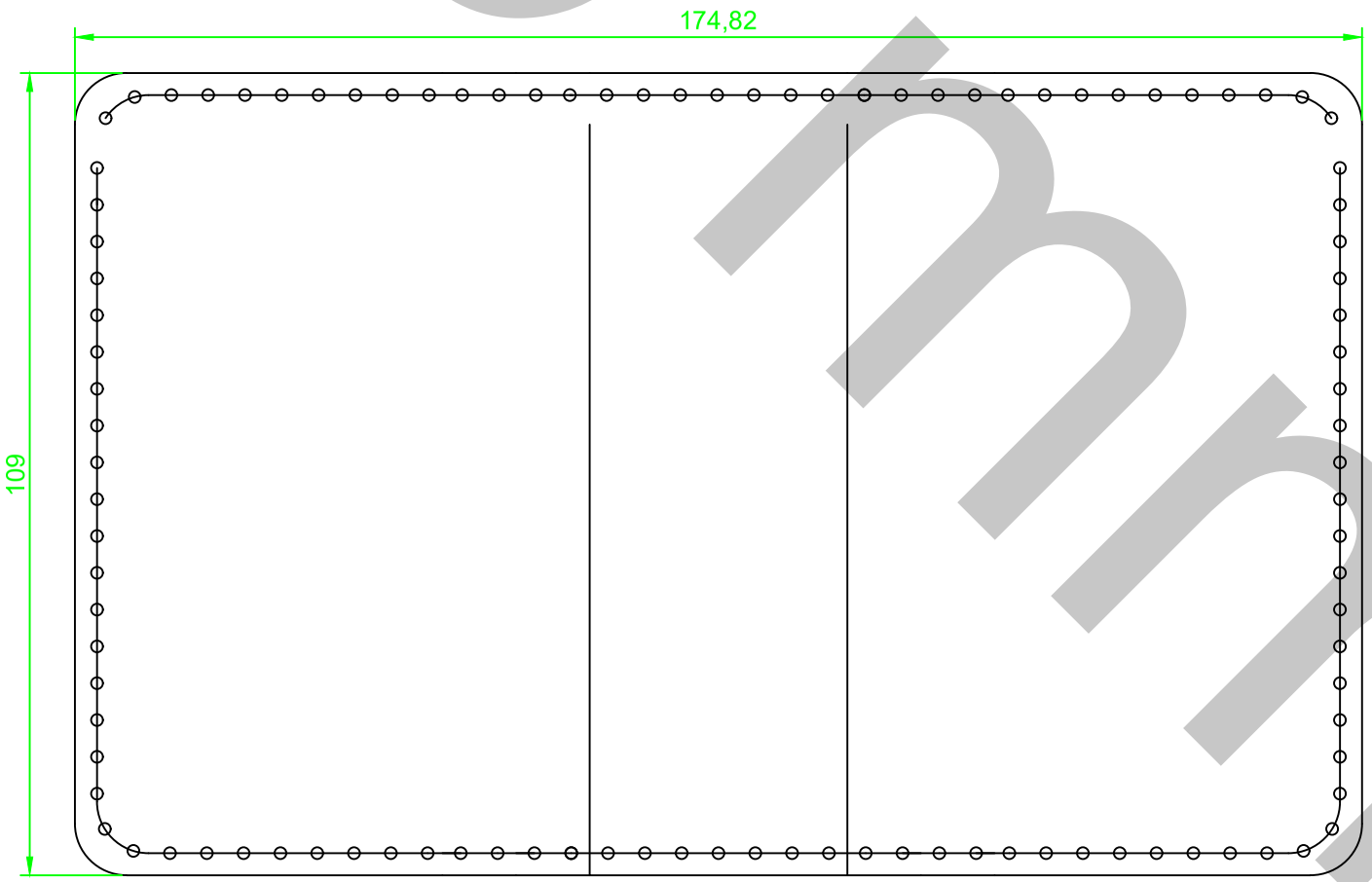

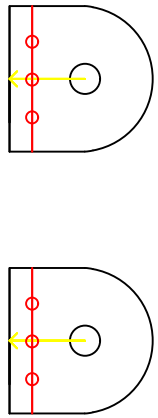

SINCE 2019
Contribution
LEATHERCRAFT
DESIGNED & HANDCRAFTED
5mm

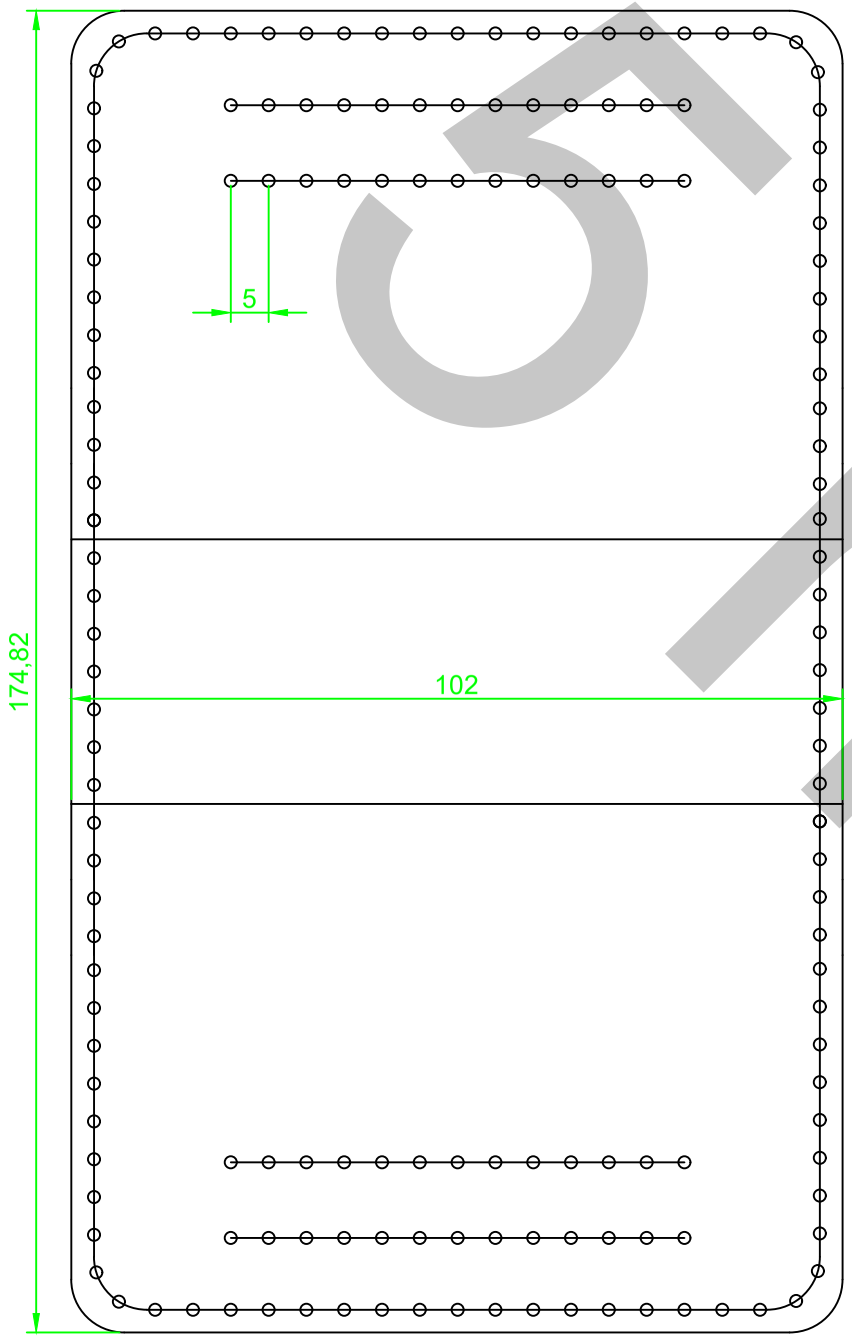

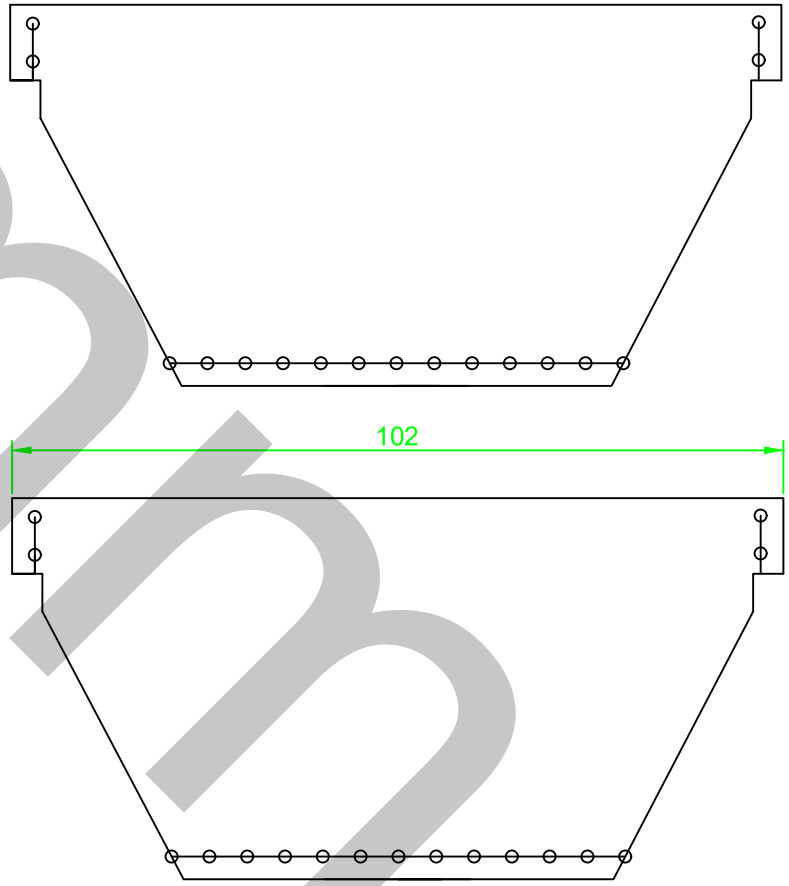

SINCE 2019
Contribution
LEATHERCRAFT
DESIGNED & HANDCRAFTED
5mm

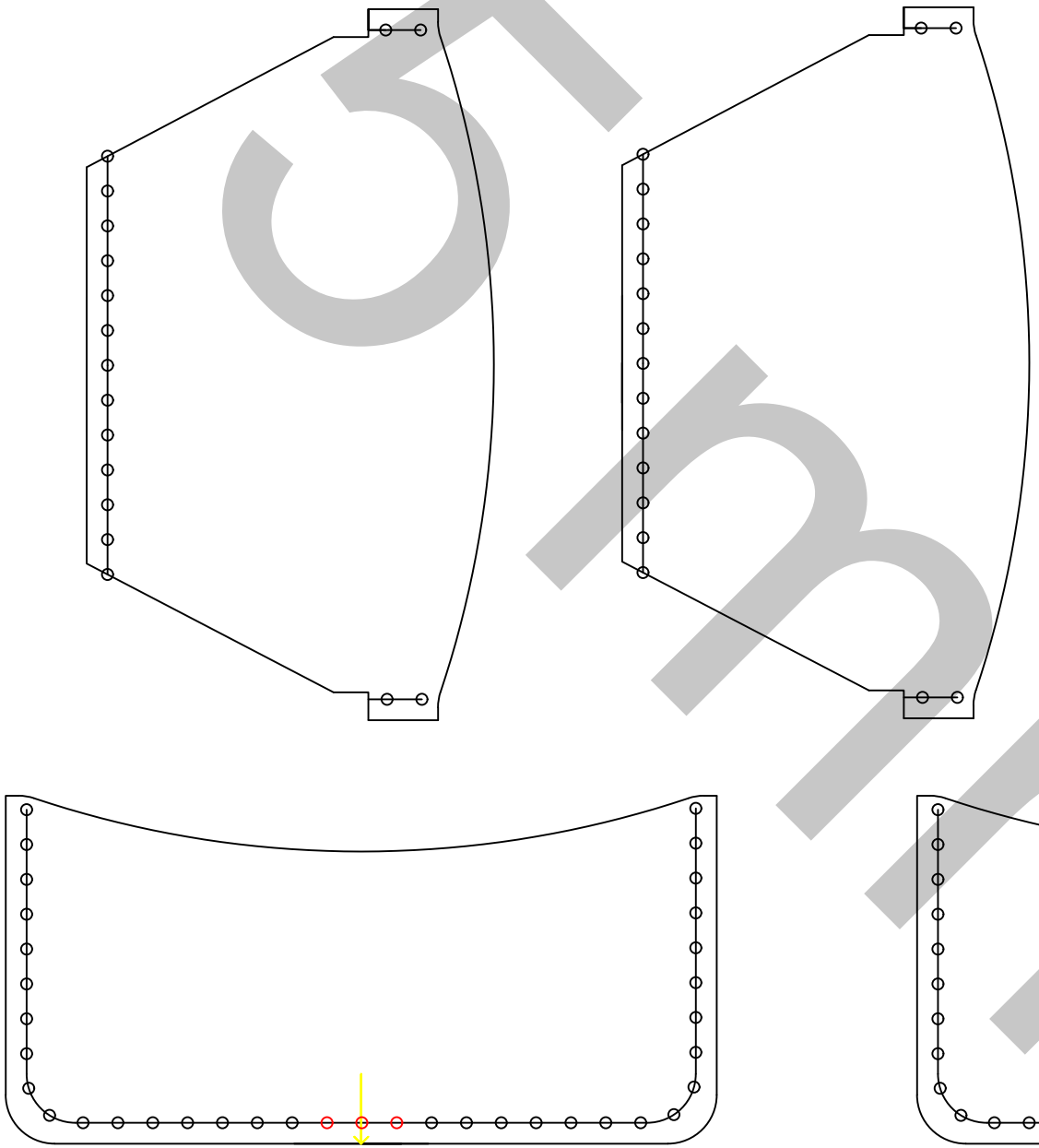

SINCE 2019
Contribution
LEATHERCRAFT
DESIGNED & HANDCRAFTED

5mm