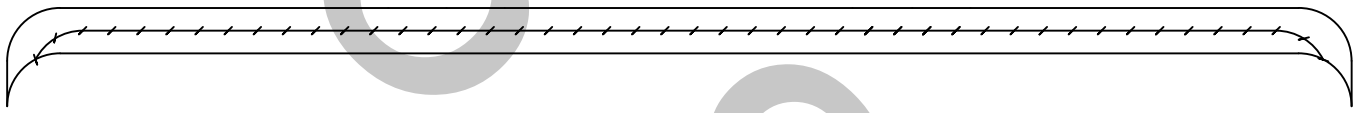

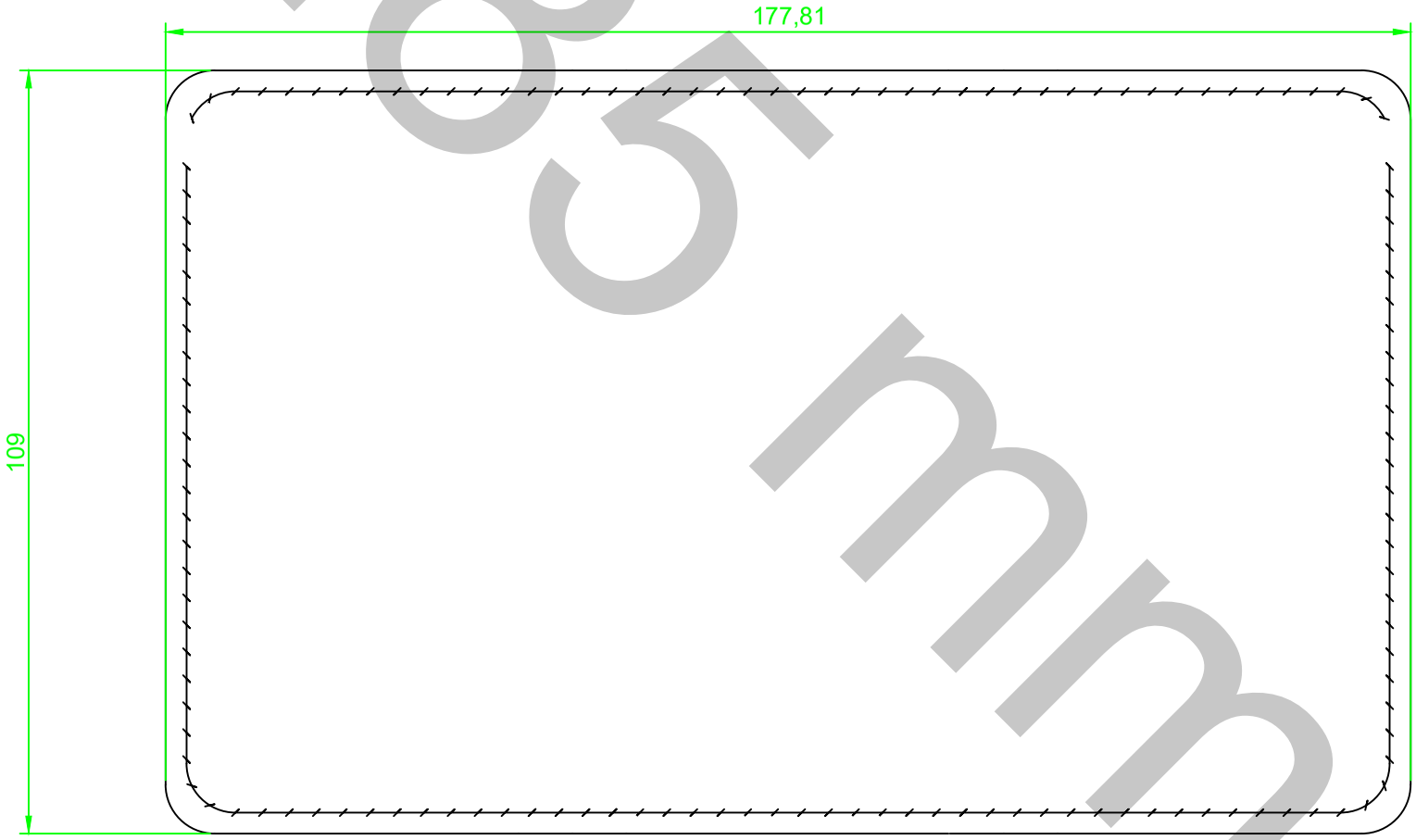

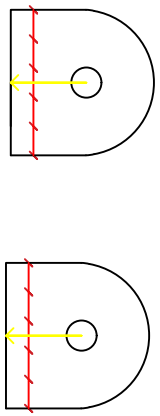

3.85 mm

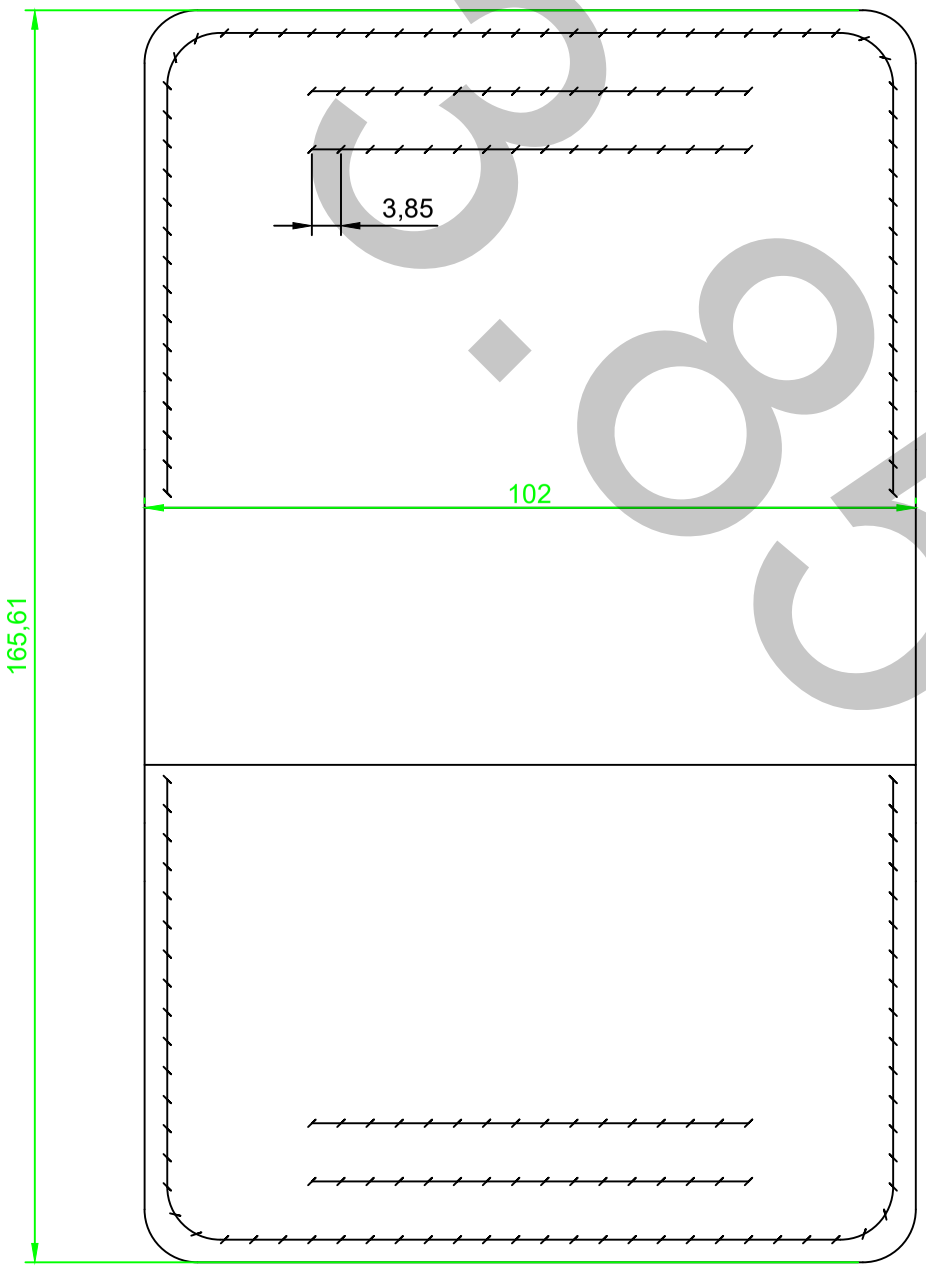

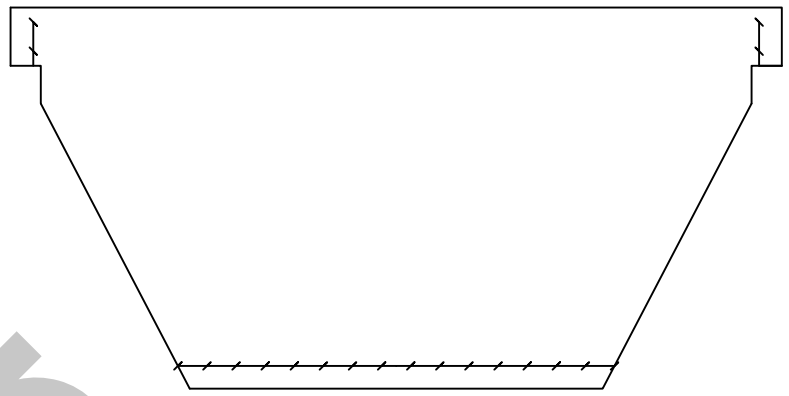

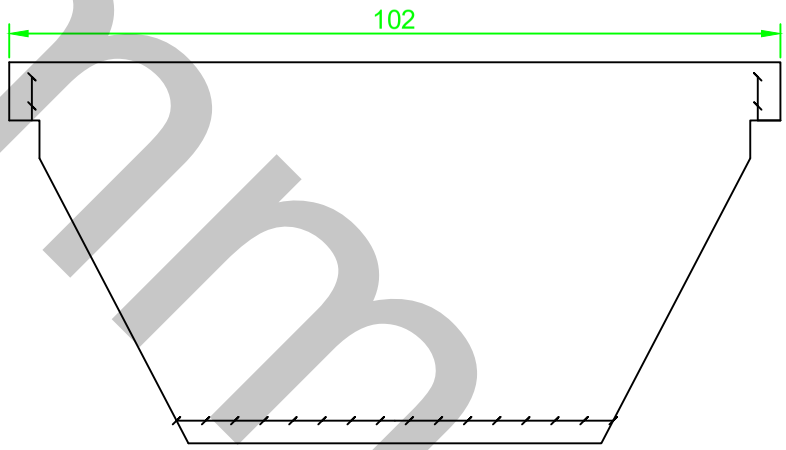

3.85 mm

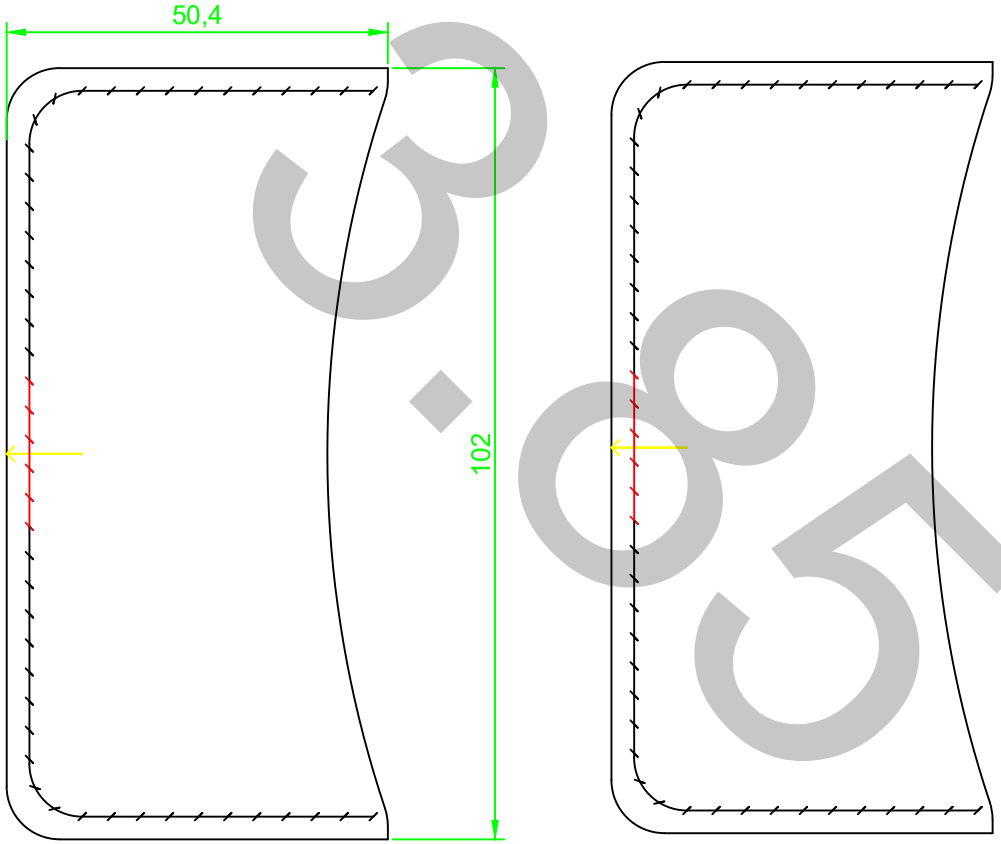

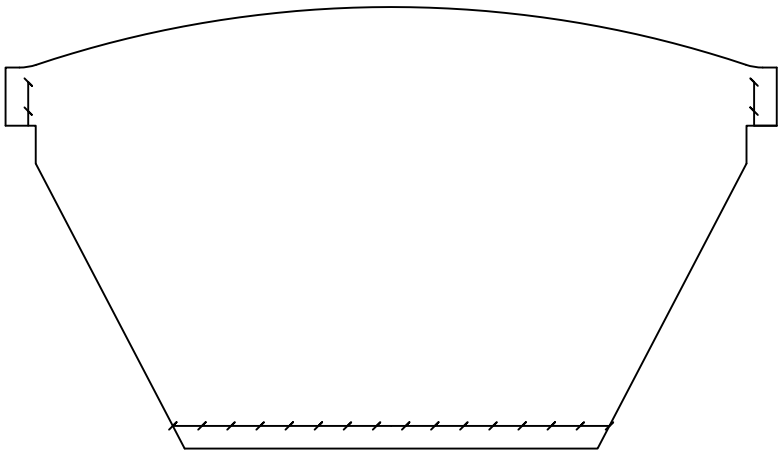

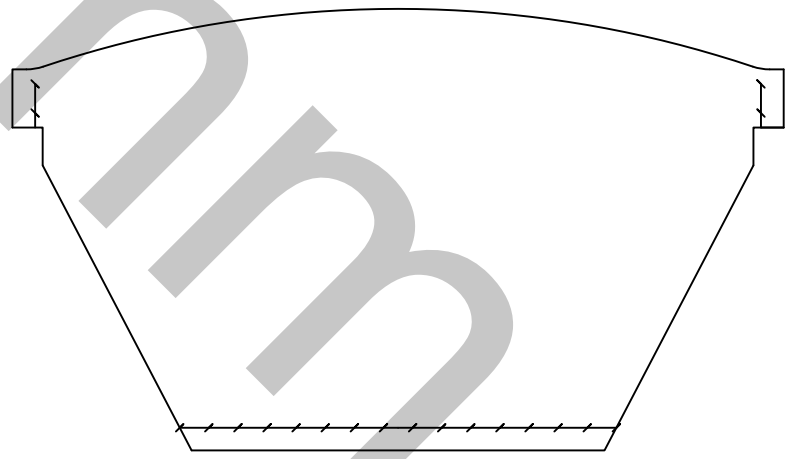

3.85mm

SINCE 2019
Contribution
LEATHERCRAFT
DESIGNED & HANDCRAFTED