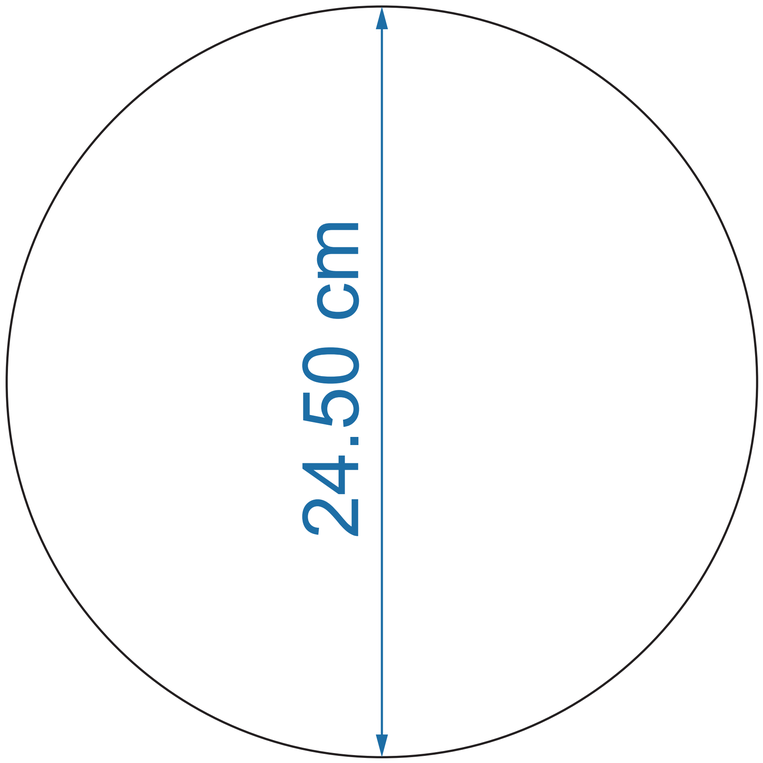

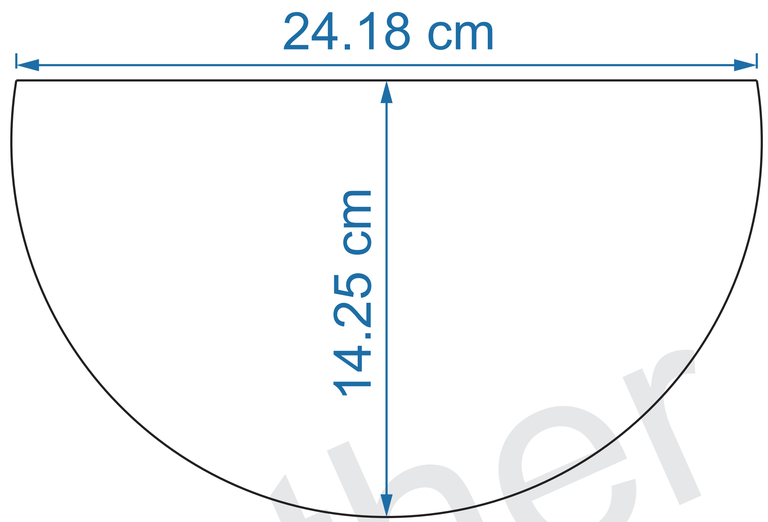

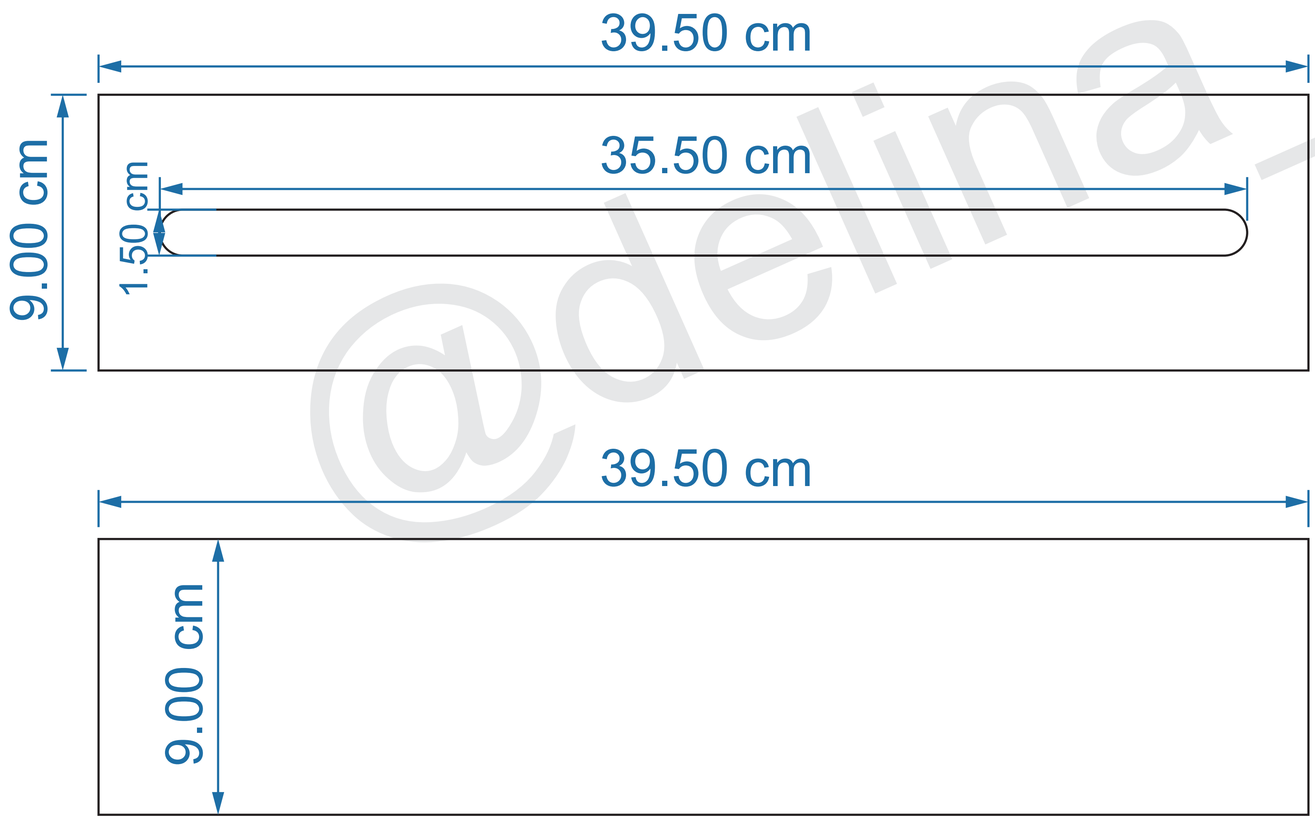

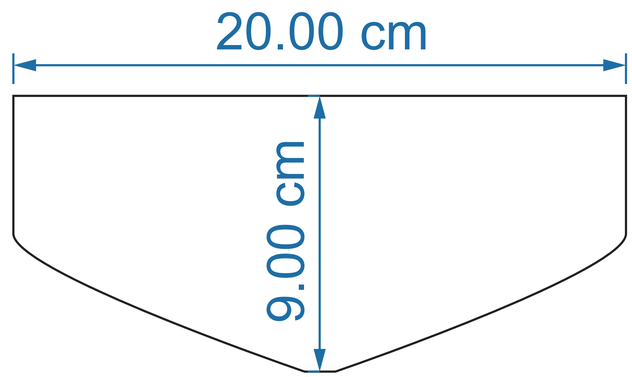

@delina_leather