Gak.leather works

10cm

Coin card holder

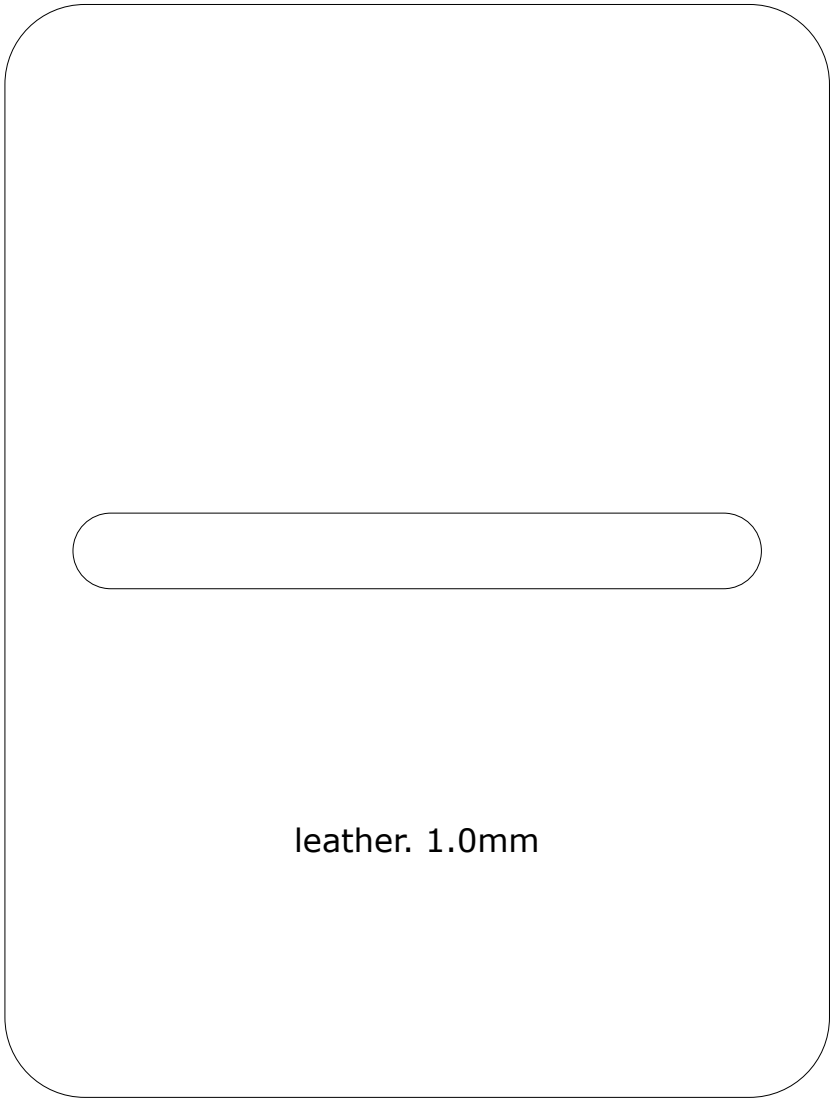

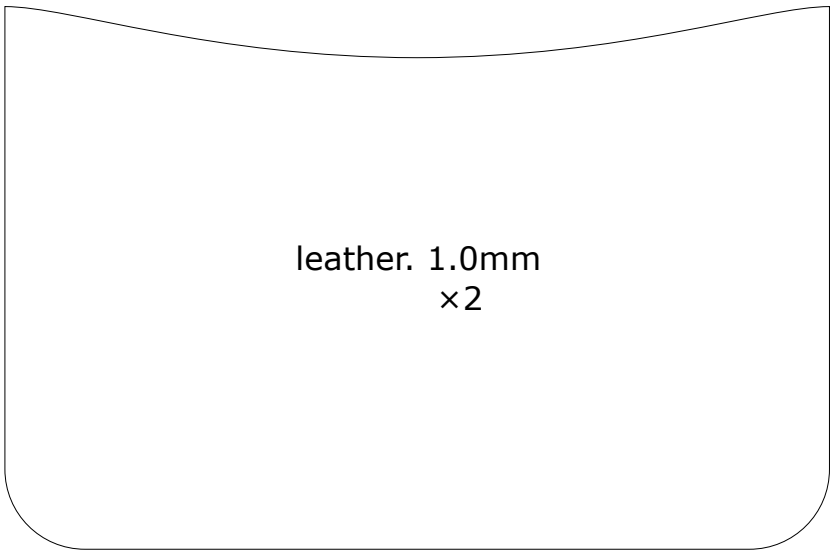

© 2020 Gak.Leather works