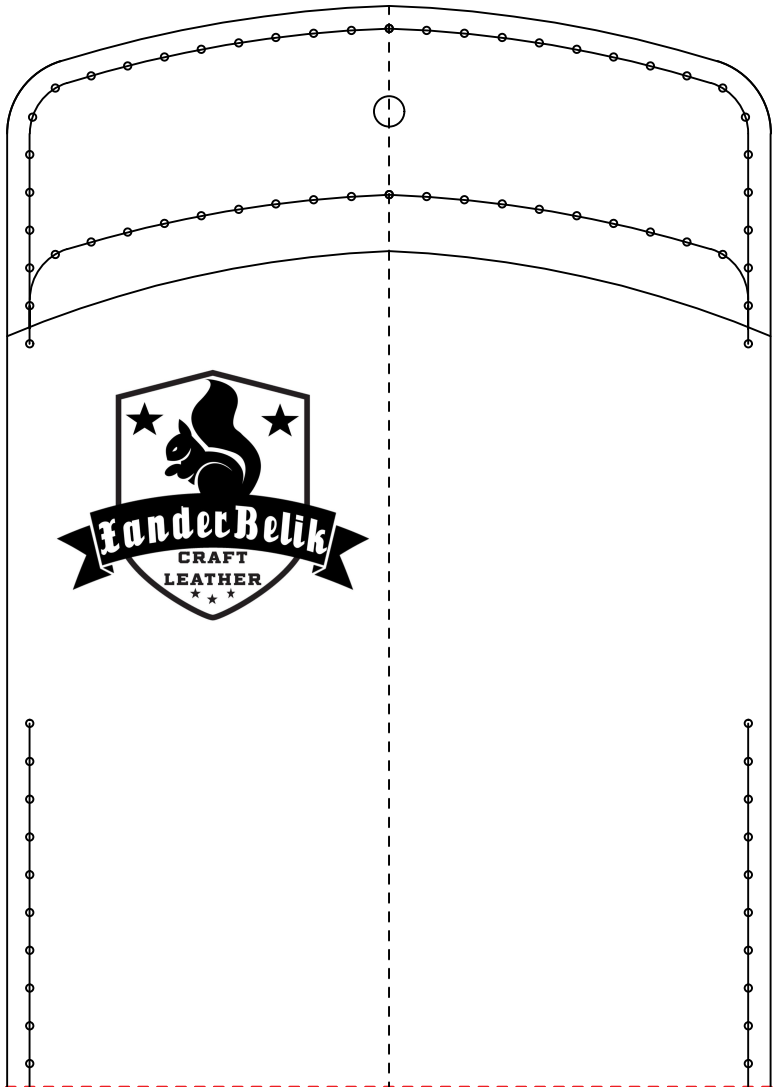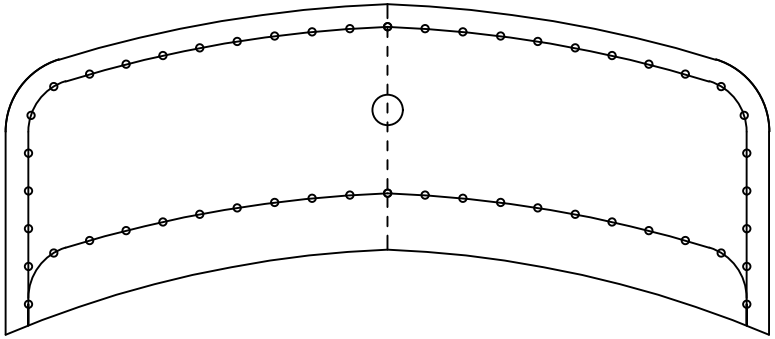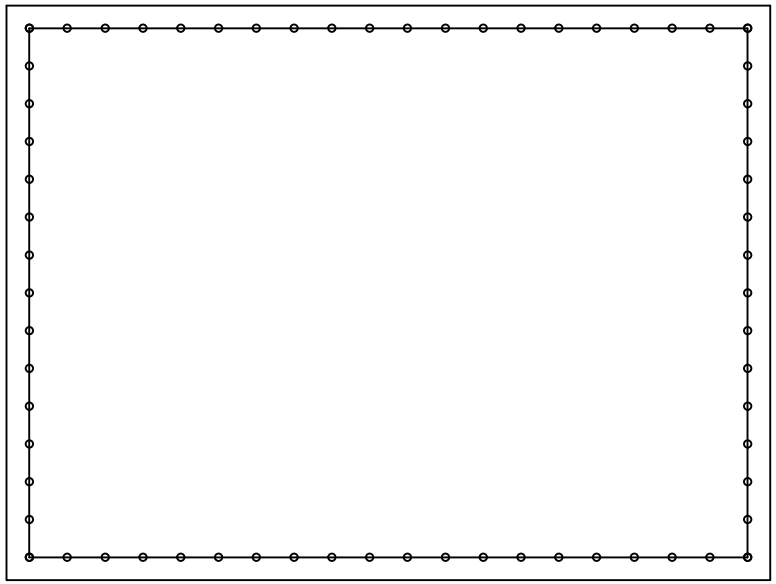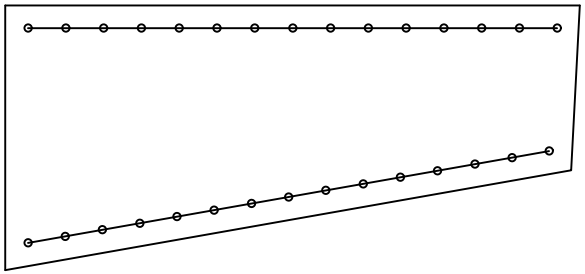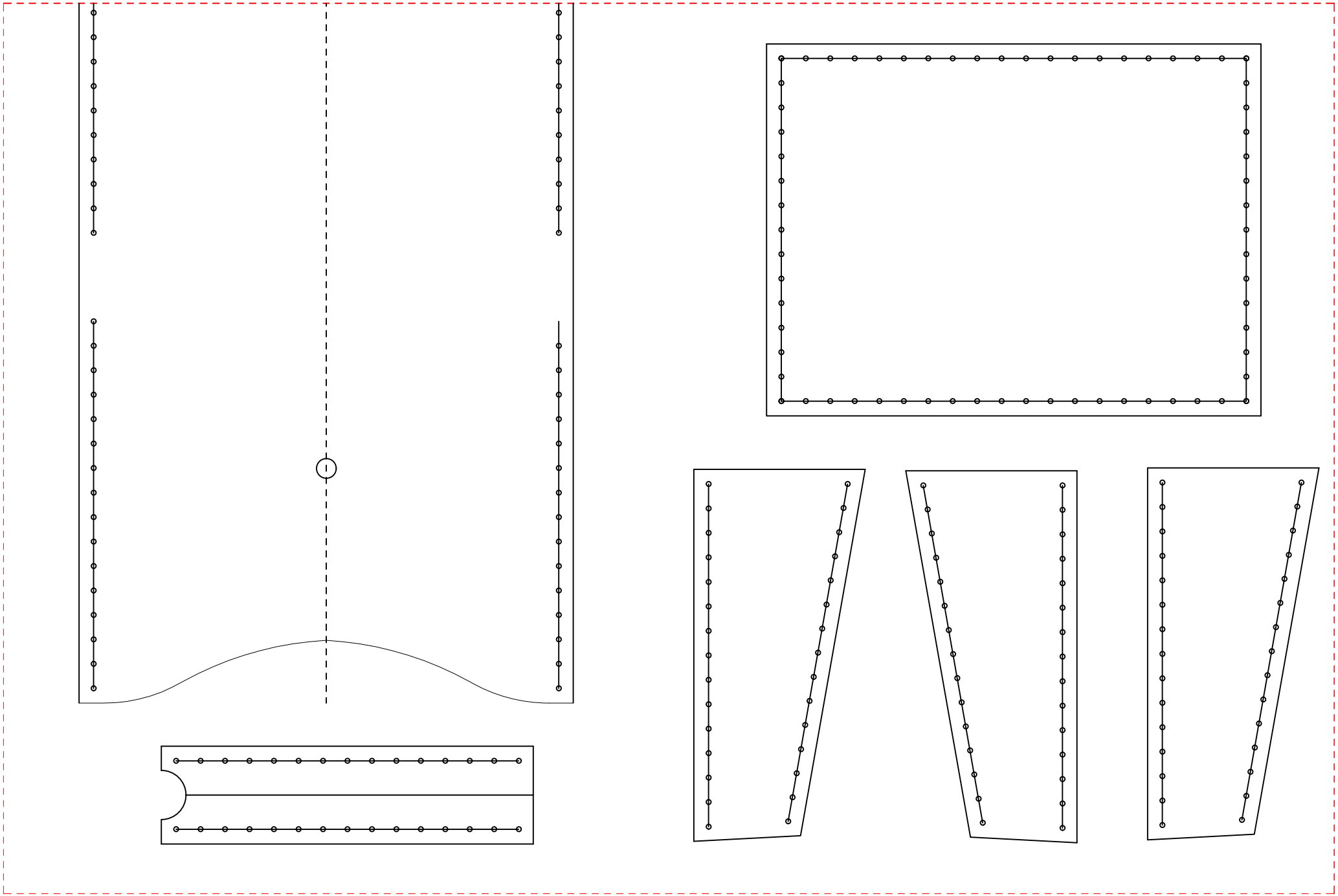
XanderBelik
CRAFT
LEATHER