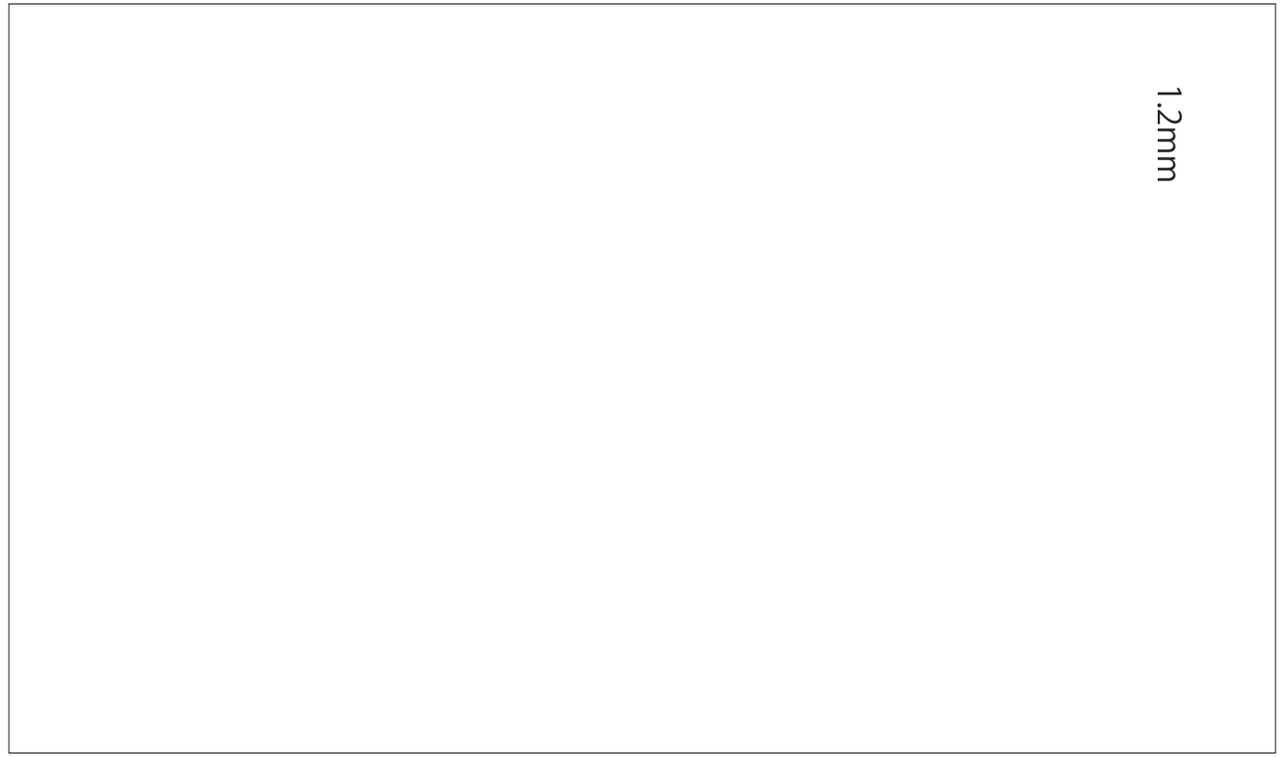
1.2mm

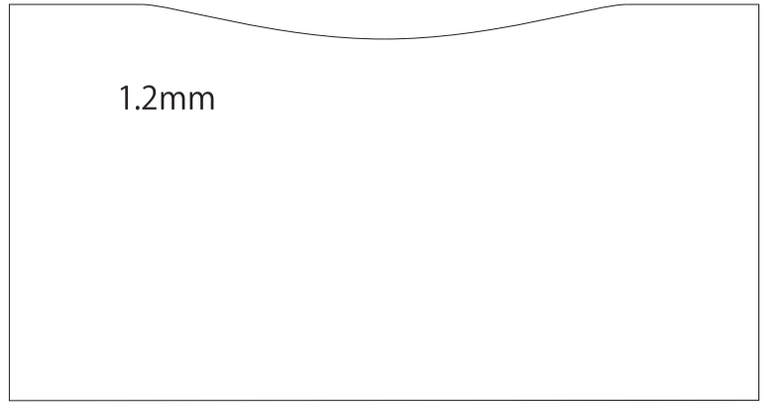
1.2mm

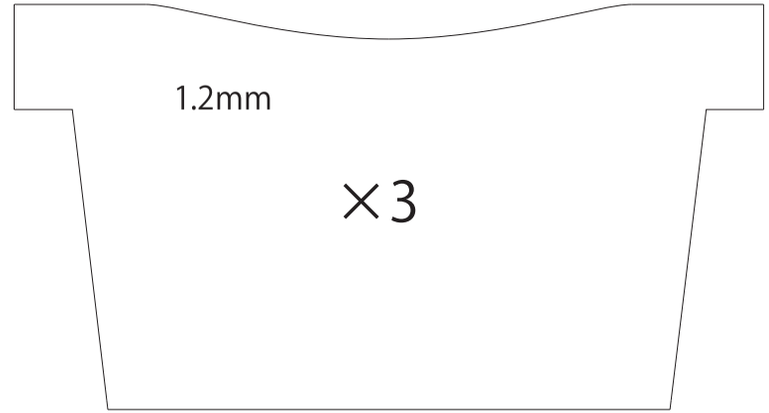
1.2mm
×3