1.2mm

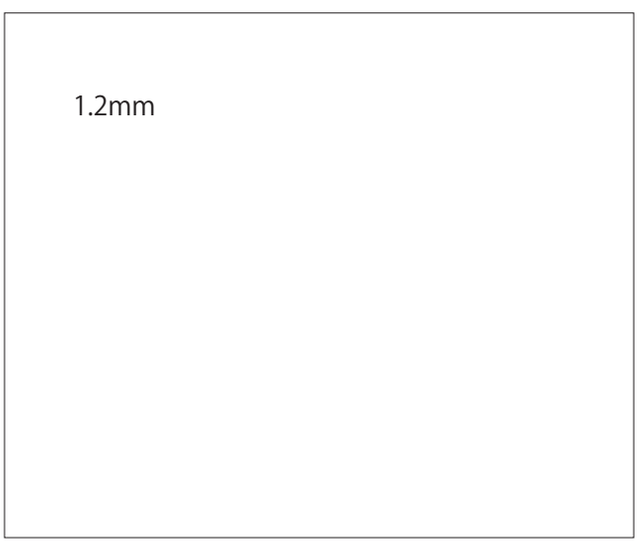
1.2mm

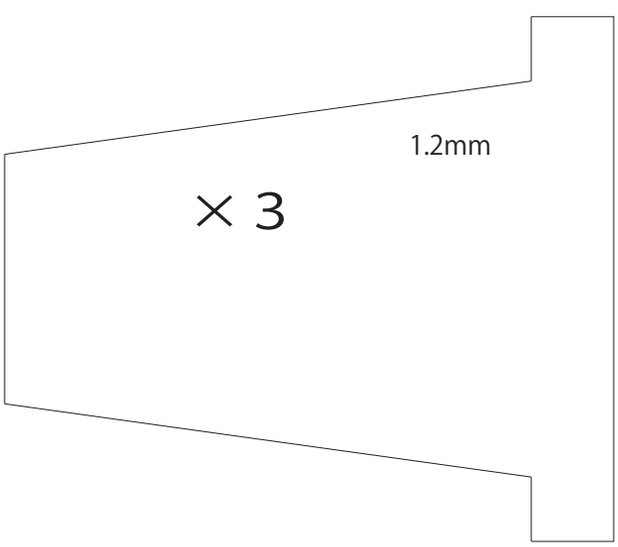
1.2mm
× 3